[圧力]の種類を以下に示す。0, 500, 1000
Selection of pressure sensor types, to be entered in "[圧力(pressure)]"
as the model, is shown as fiiows : 0, 500, 1000

[電源]の種類を以下に示す。BT, AC, DC
Selection of power supply types, to be entered in "[電源(power supply)]"
as the model, is shown as flllows : BT, AC, D

※メーター及び配管フランジに接触し破損の恐れがあるため、表示部フタはゆっくり開けてください。
Due to the risk of damage from contact with the meter or pipe flanges,
please open the cover slowly.

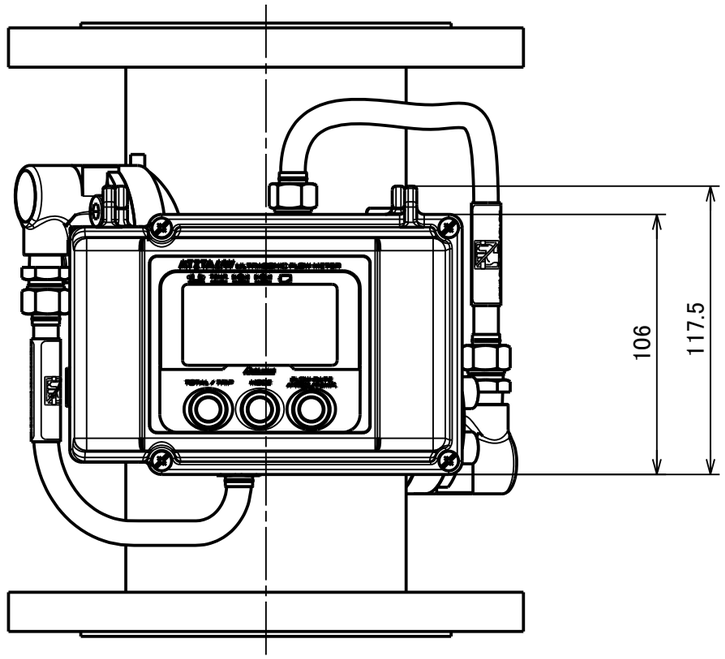

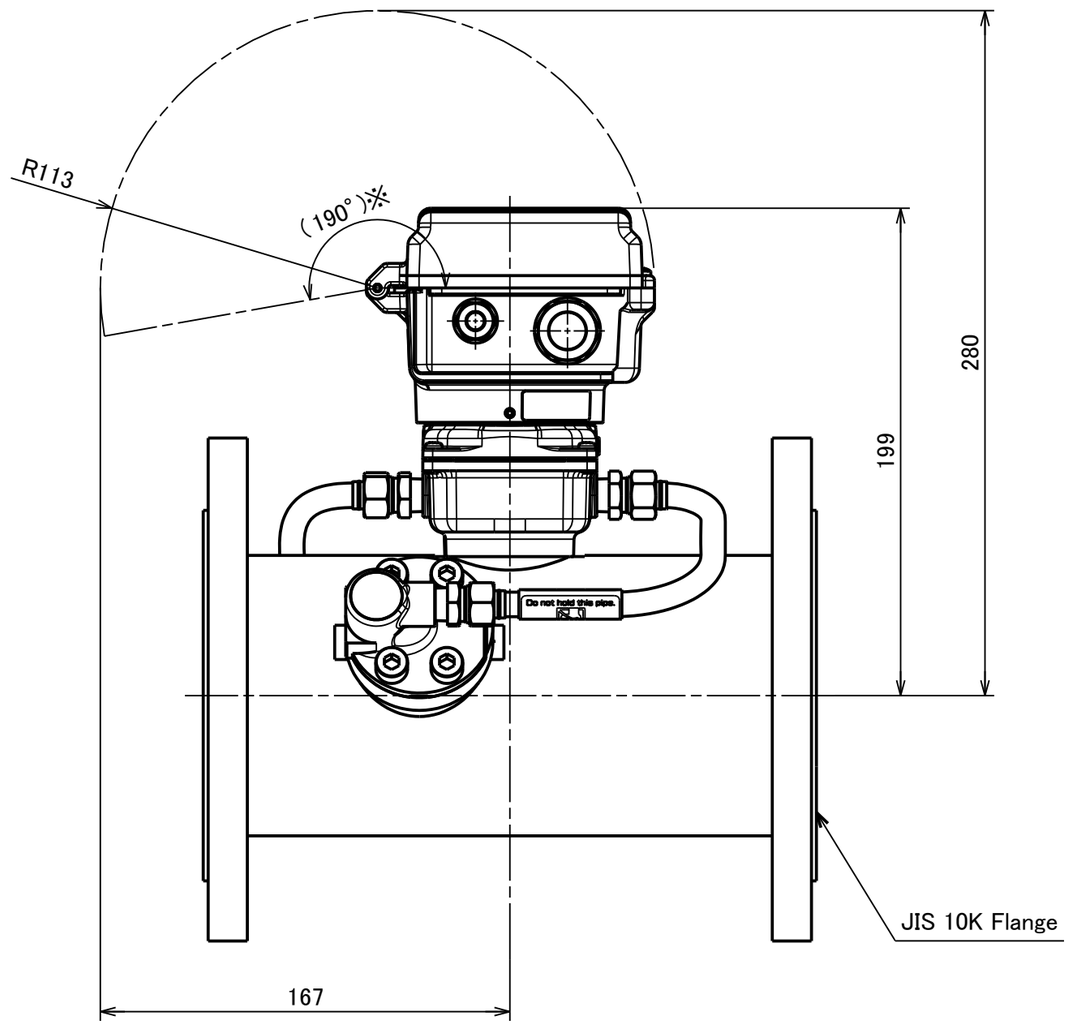

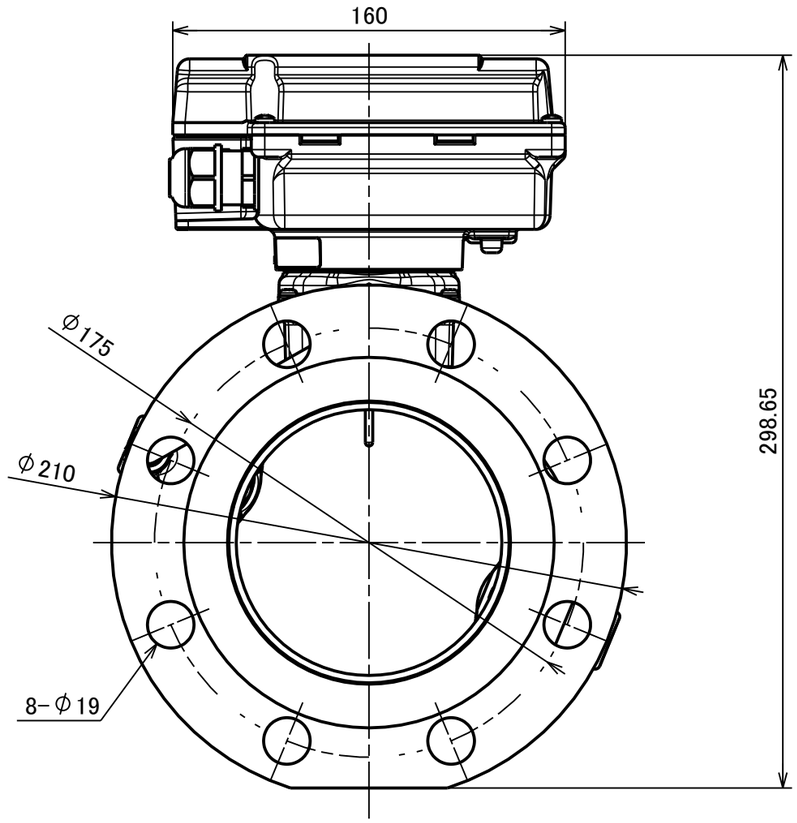

尺度 SCALE	年月日 DATE 2024/03/12	名称 NAME Ultrasonic Flow Meter for Management of Fuel Gas	図番 DRAWING NUMBER UW100-[圧力][電源]-U

UW100-[圧力][電源]-U
型式 MODEL

CADファイル名: 社外版UW100-[圧力][電源]-U_0_外形図_A3

Aichi tokei denki co., ltd.