[圧力]の種類を以下に示す。0, 500, 1000
Selection of pressure sensor types, to be entered in "[圧力(pressure)]"
as the model, is shown as fiiows : 0, 500, 1000

[電源]の種類を以下に示す。BT, AC, DC
Selection of power supply types, to be entered in "[電源(power supply)]"
as the model, is shown as flllows : BT, AC, DC

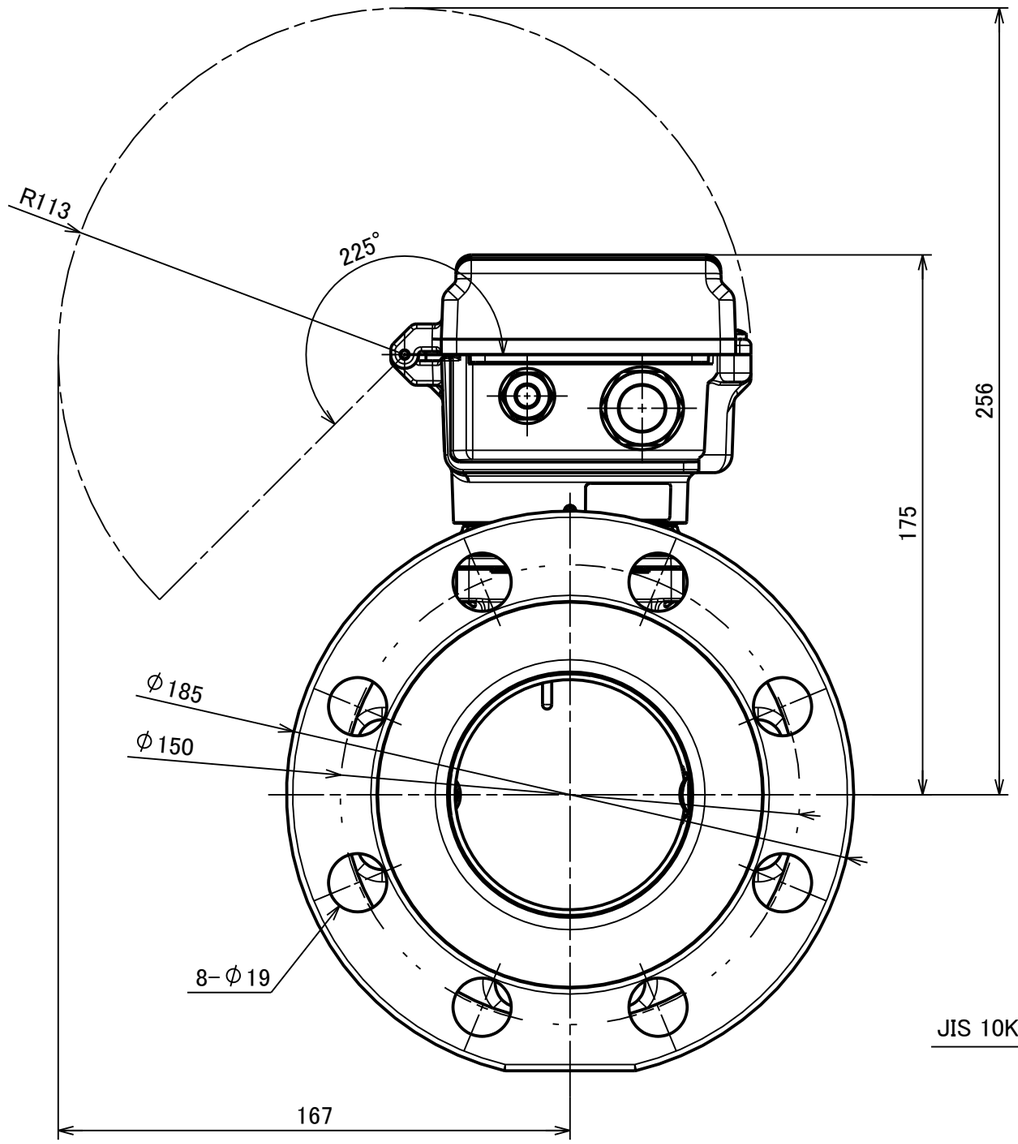


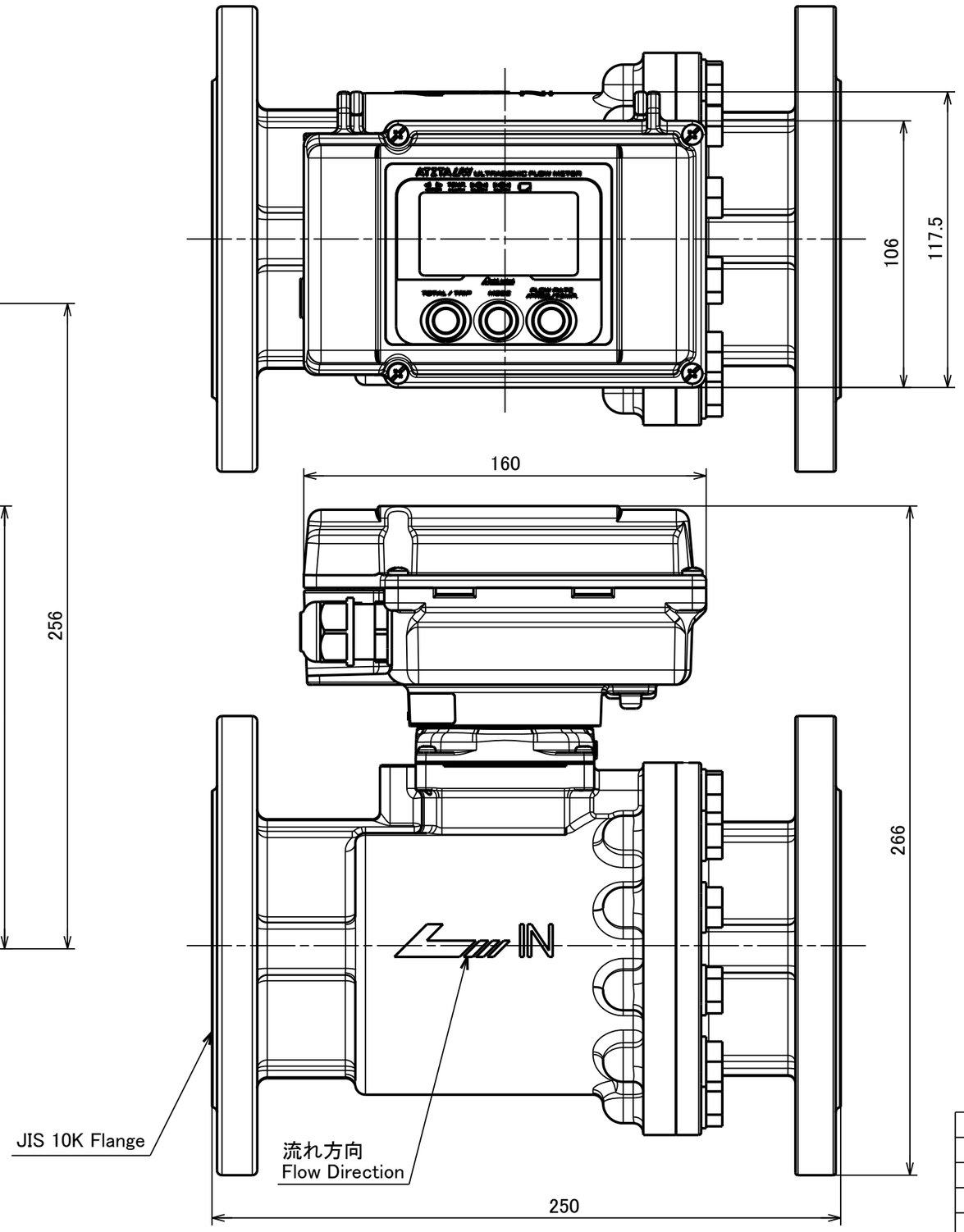


| 尺度 SCALE | 年月日 DATE | 名称 NAME | 図番 DRAWING NUMBER |
|---|---|---|---|
| | 2024/03/12 | Ultrasonic Flow Meter for Management of Fuel Gas | UW80-[圧力][電源]-R |

UW80-[圧力][電源]-R
型式 MODEL

CADファイル名：社外版UW80-[圧力][電源]-R_0_外形図_A3

Aichi tokei denki co., ltd.